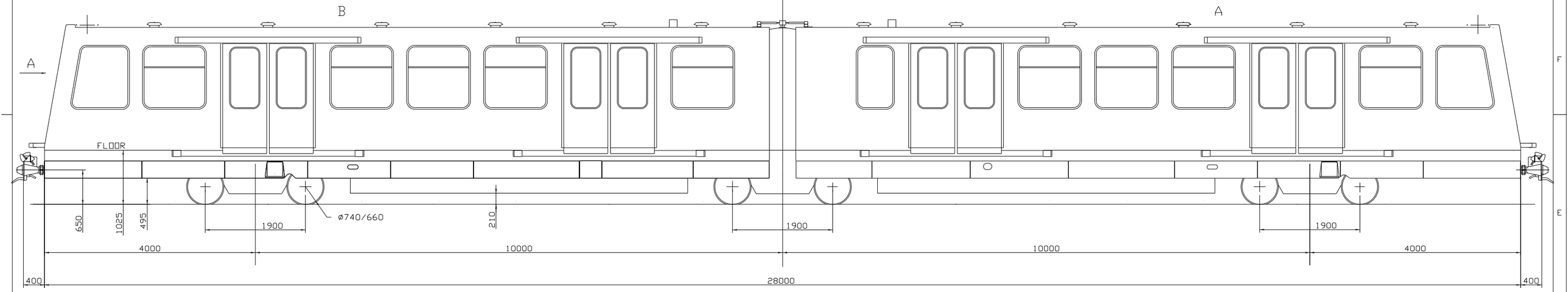

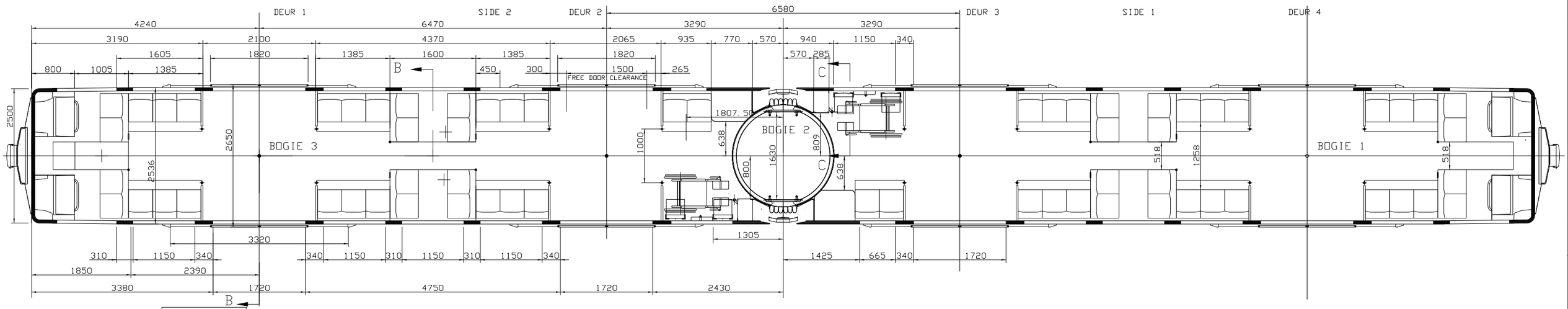

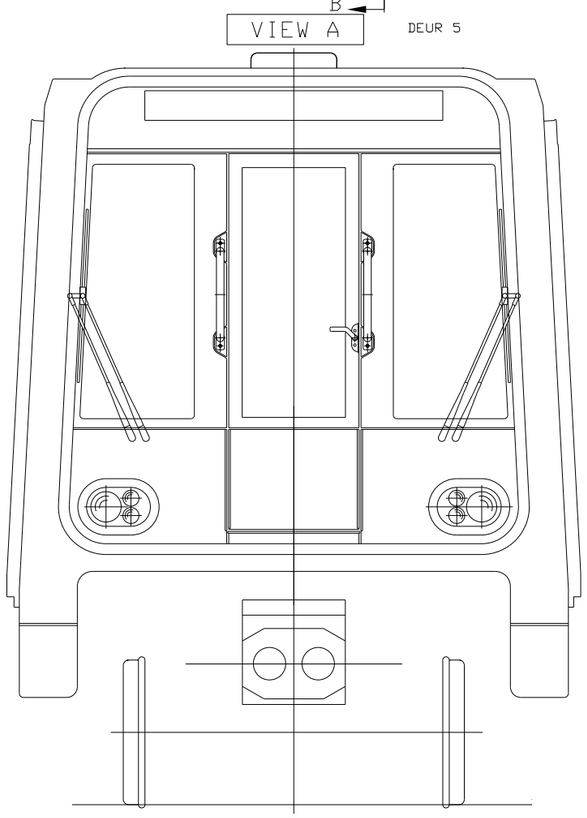

* M2-LOAD: SEATING CAPACITY

SEATS 64
TIP-UP SEATS 4

TOTAL 68

* M3-LOAD: 260 PASSENGERS (PERFORMANCE)

* M4-LOAD: 290 PASSENGERS

* CAPACITY WITH 6P/M²

SEATS 64
STANDEES 6P/M² 228

TOTAL 292

PROPRIETARY

THIS DOCUMENT CONTAINS PROPRIETARY TRADE-SECRET INFORMATION WHICH IS THE PROPERTY OF S.A. CONSTRUCTIONS FERROVIAIRES ET METALLIQUES BELGIUM AND ACCES TRANSMITTAL OR DISCLOSURE OF THIS DOCUMENT IS RESTRICTED. THE RECIPIENT AND/OR READER HEREOF, BY ACCEPTING ACCES TO THIS DOCUMENT ASSUMES CUSTODY AND CONTROL UNDER A CONFIDENTIAL RELATIONSHIP. THE SUBJECT MATTER HEREOF IS THE PROPRIETARY DESIGN AND DATA OF S.A. CONSTRUCTIONS FERROVIAIRES ET METALLIQUES AND ALL THE PROPRIETARY AND NOVEL FEATURES OF THE SUBJECT MATTER ARE RESERVED BY S.A. CONSTRUCTIONS FERROVIAIRES ET METALLIQUES AND ARE NOT TO BE MANUFACTURED, USED, SOLD OR DISCLOSED TO OTHERS, NOR ARE DEVICES EMBODYING SUCH FEATURES OR INFORMATION DERIVED FROM THIS DISCLOSURES UNLESS AND UNTIL EXPRESSLY AUTHORISED IN WRITING BY CONSTRUCTIONS FERROVIAIRES ET METALLIQUES. THESE DRAWINGS AND DATA ARE AND REMAIN THE PROPERTY OF S.A. CONSTRUCTIONS FERROVIAIRES ET METALLIQUES AND ARE NOT TO BE COPIED OR REPRODUCED WITHOUT WRITTEN PERMISSIONS, AND OR TO BE RETURNED UPON REQUEST.

APPLICATIONS	DATE	NAME	MODIFICATIONS	REV.
	21.02.01	HA	MODIF. SECTION C-C	A

Replaces | Replaced by | Sheet 1/1

ISO 1302

BOMBARDIER TRANSPORTATION

DL-999-0001-1

Verifing : ISO 2553 BN 01153 | Tol: UIC 800-500-Bn 800-01

	DATE	NAME
Drawn		
Check		
Appr.		

Scale : 1/25 1/10

GENERAL VEHICLE LAY-OUT

ISO-128

DOCKLANDS LIGHT RAIL

B92

DOCKLANDS LIGHT RAILWAY LTD
DLR ADDITIONAL VEHICLE PROJECT

REF DWG B92

DESIGNED BY CADAM A0