Transport for London
London Underground
MAYOR OF LONDON
UNCONTROLLED COPY
WILL NOT BE UPDATED
THIS DRAWING MAY NOT BE CURRENT AND SUBJECT TO AMENDMENT. THEREFORE DO NOT PRODUCE OR MANUFACTURE ANY PART THERE OF, WITHOUT FIRST SEEKING VERIFICATION FROM THE RSE – ERM BEFORE USE

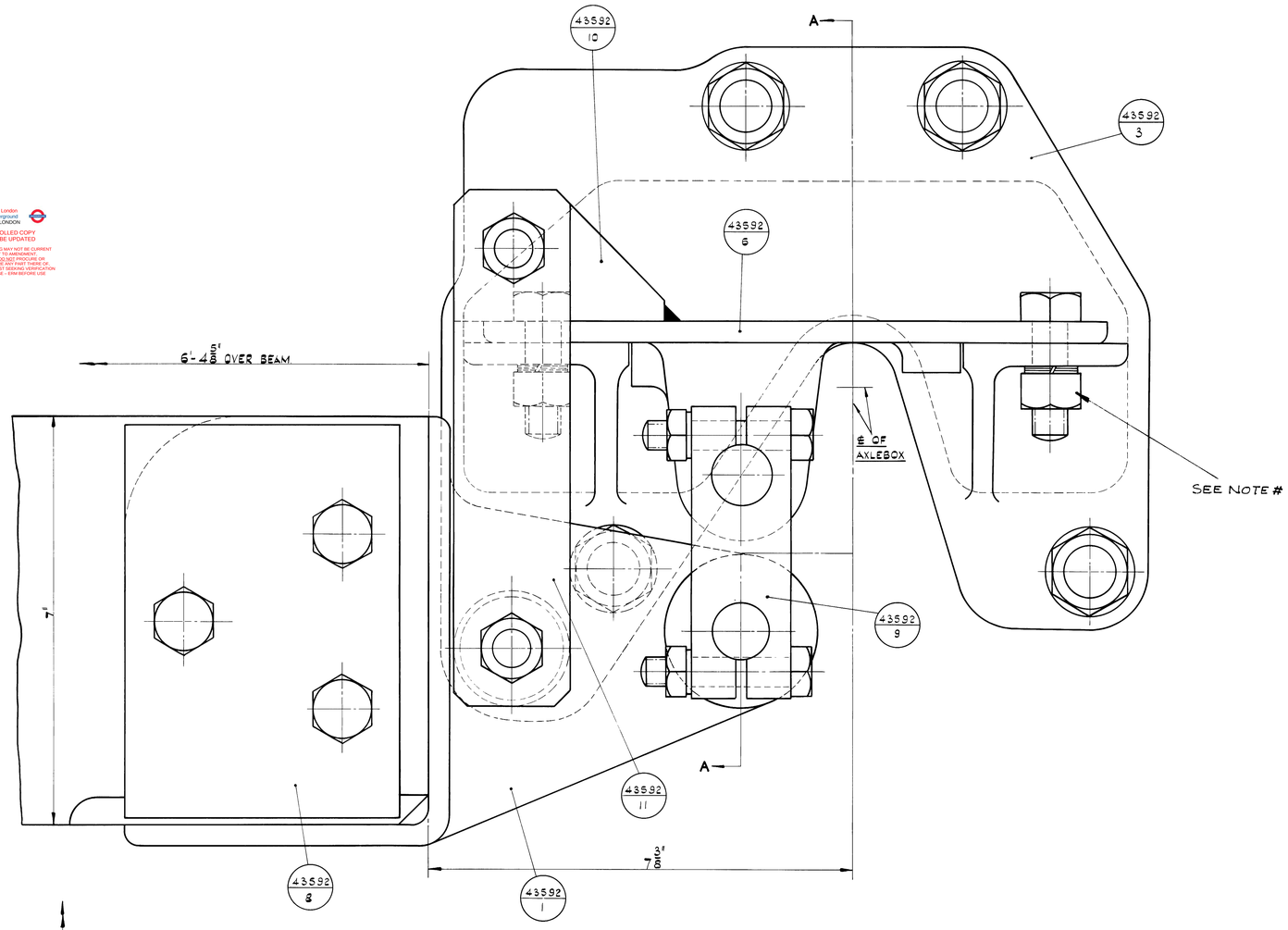

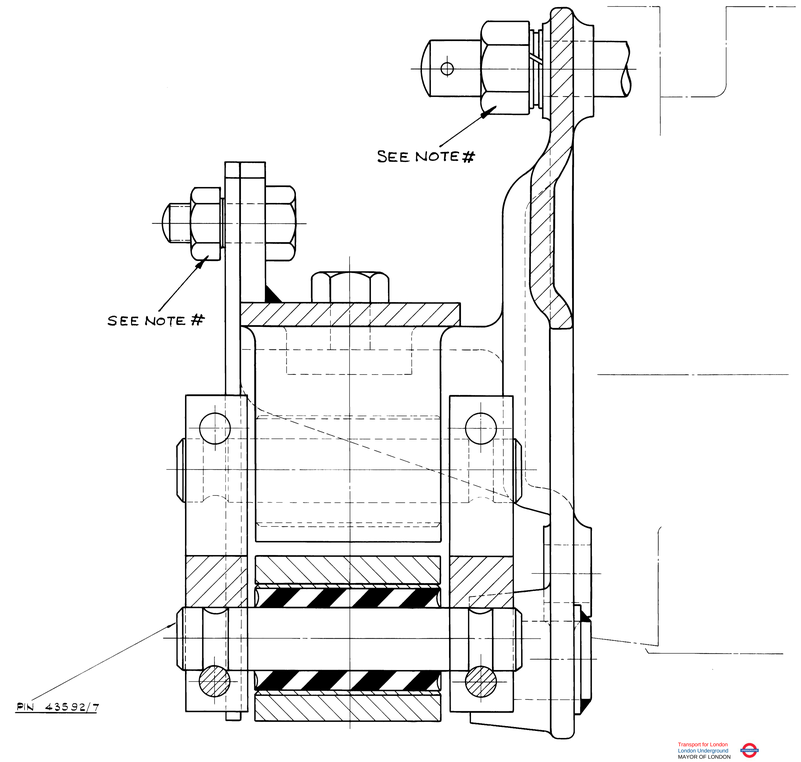

SECTION 'A-A'

Transport for London
London Underground
MAYOR OF LONDON
UNCONTROLLED COPY
WILL NOT BE UPDATED
THIS DRAWING MAY NOT BE CURRENT AND SUBJECT TO AMENDMENT. THEREFORE DO NOT PRODUCE OR MANUFACTURE ANY PART THERE OF, WITHOUT FIRST SEEKING VERIFICATION FROM THE RSE – ERM BEFORE USE

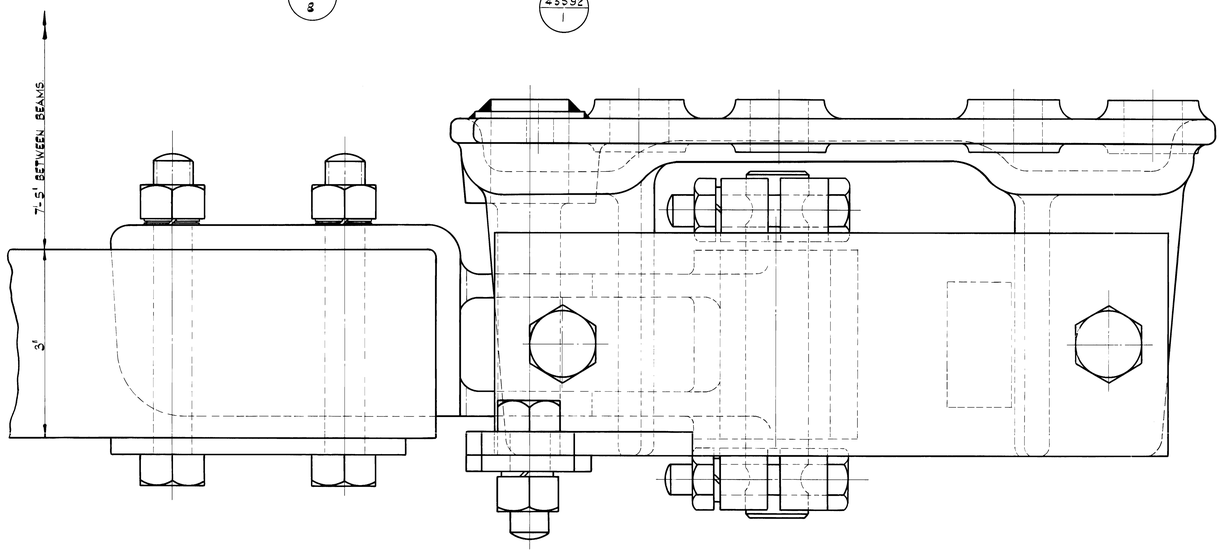

NOTE -

FOR DETAILS OF SHOEBEAM FIXING (INNER AXLE) SEE DRG No 43592
FOR ARRGT OF SHOEBEAM FIXING (OUTER AXLE) SEE DRG No 43591
FOR DETAILS OF SHOEBEAM FIXING (OUTER AXLE) SEE DRG No 43593

NOTE #
FOR TORQUE SETTING VALUES REFER TO TORQUE REFERENCE CHART DRG. 86930

A60/62 SURFACE STOCK.

ARRANGEMENT OF SHOEBEAM FIXING.
(INNER AXLE.)
TYPES "A" & "D" MOTOR CARS.

SCALE. FULL SIZE.

LONDON TRANSPORT EXECUTIVE
CHIEF MECHL. ENGINEERS OFFICE.

DRG. No. 43590.

DATE. 24 - 7 - 62.

MICROFILMED

A

OFFICE. 407	FILING. 407

A METHACRYLATE NOTE # ADDED. A.E.D. (A)
MODIFICATIONS

CONTRACTORS DRG. No. 29091.